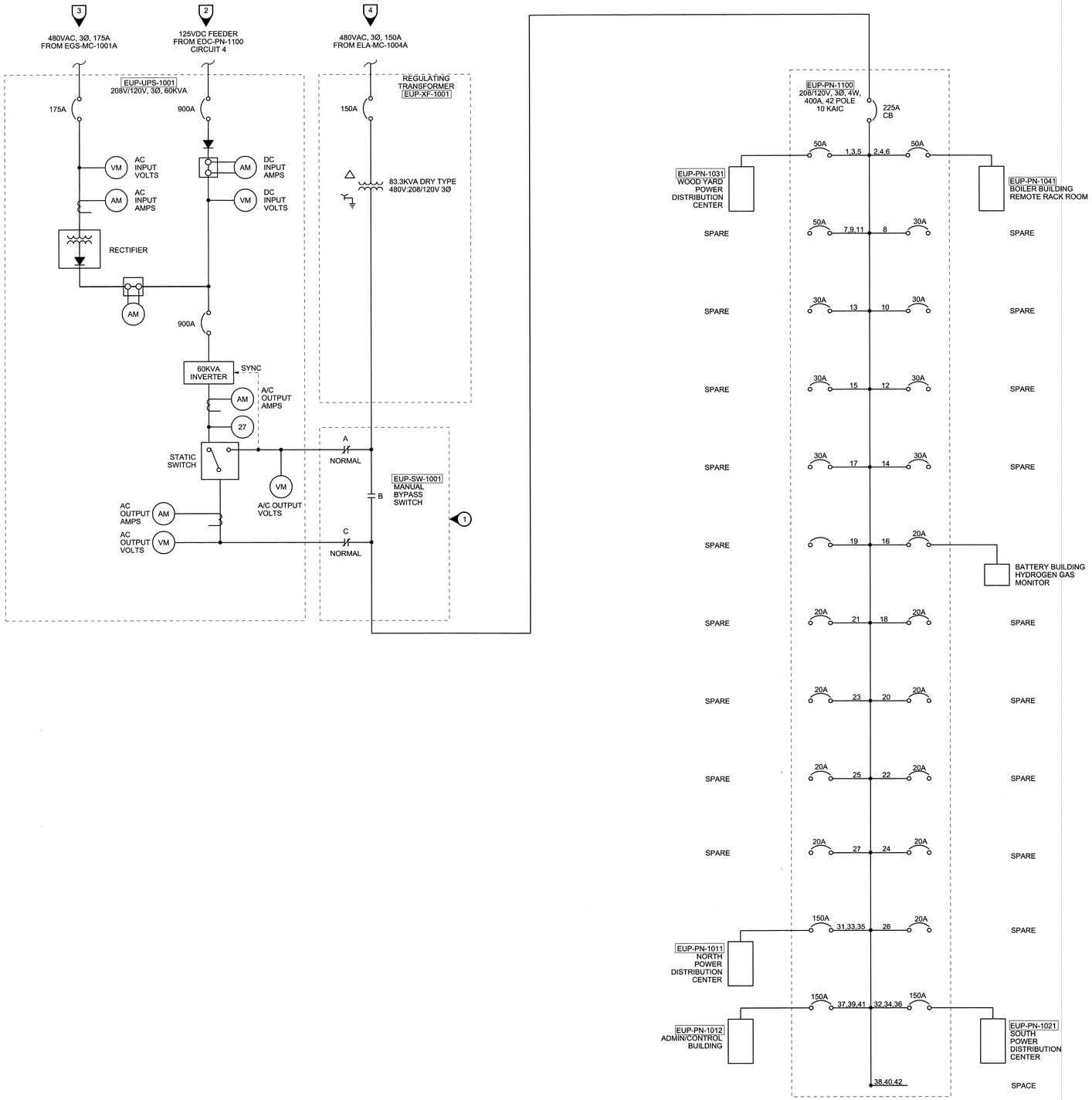

GENERAL NOTES

1. MANUAL BYPASS SWITCH CONFIGURATION:

POSITION	A	B	C
NORMAL	X		X
ISOLATED BYPASS		X	
BYPASS TO LOAD	X		X
CLOSE = X			
NO OTHER CONFIGURATIONS ALLOWED			

REFERENCE DRAWINGS

1. ANNOTATIONS, ABBREVIATIONS & ASSOCIATIONS ELECTRICAL SYMBOLS LIST AND GENERAL NOTES D014200-AAAE71001 SH01-SH02
2. DC POWER SYSTEM 125VDC POWER SYSTEM; ONE-LINE DIAGRAM D014200-EDCE11001 SH01
3. LOW VOLTAGE AC POWER SYSTEM; 480V MCC EGS-MC-1001A ONE-LINE DIAGRAM D014200-EGSE11011 SH01
4. LOW VOLTAGE AC POWER SYSTEM; 480V MCC ELA-MC-1004A ONE-LINE DIAGRAM D014200-ELAE11017 SH01
5. SWITCHBOARD GENERAL INFORMATION (EATON UX830203D201-000) M014200-EDCE00018 SH01-07 REV 1
6. SINGLE LINE DIAGRAM (GUTOR 1120044002/00) M014200-EUPE0009 SH01 REV 7

NO.	REVISION	DATE	DRWN	DSND	CHKD	CHKD
1	REVISED CIRCUIT BREAKERS AND UPS SCHEMATIC	100812	LEP	MKP	MBP	LM
0	ISSUED FOR BID					

Gainesville Renewable Energy Center
An American Renewables Company

ZACHRY

ZACHRY ENGINEERING CORPORATION - 1515 ARAPAHOE STREET, TOWER 1, SUITE 900, DENVER, CO 80202-4256
FLORIDA BOARD OF PROFESSIONAL ENGINEERS CERTIFICATE OF AUTHORIZATION #26739
AMARILLO, TX CHARLOTTE, NC HOUSTON, TX MINNEAPOLIS, MN OMAHA, NE SAN ANTONIO, TX

ZACHRY ENGINEERING CORPORATION (ZACHRY) RETAINS ALL RIGHT, TITLE AND INTEREST, IN AND TO ALL INFORMATION INCLUDING, BUT NOT LIMITED TO, ALL INTELLECTUAL PROPERTY DEVELOPED BY, OR ON BEHALF OF, ZACHRY. NEITHER THIS DRAWING, NOR ANY INFORMATION CONTAINED HEREIN, SHALL BE REPRODUCED, USED OR RELIED UPON FOR THE PREPARATION OF DRAWINGS OR APPARATUS, OR FOR ANY OTHER PURPOSE, EXCEPT AS EXPRESSLY AUTHORIZED IN WRITING BY ZACHRY.

EXTENSIVE CHANGES
REVIEW THOROUGHLY

MICHAEL A. GENTRUP
LICENSE
10/8/12
No. P.E. 72557
STATE OF FLORIDA
PROFESSIONAL ENGINEER

GAINESVILLE RENEWABLE ENERGY CENTER
UNINTERRUPTIBLE POWER SYSTEM
208/120V 3-PHASE UPS SYSTEM
ONE-LINE DIAGRAM

DRAWN	DESIGNED	CHECKED	CHECKED
J. BEGE	E. NIELSEN	J. STILLWELL	L. MEYER

APPROVED DM	DRAWING NUMBER	SHEET	REV
M. GENTRUP	D014200- EUPE11001	01	1

APPROVED PM: PRUNST

Markp 10/8/2012 2:25:32 PM P:\FAGEN\014200\techservdgn\Elec\Orthot\EUPe11001s01 - UPS One-Line.dgn